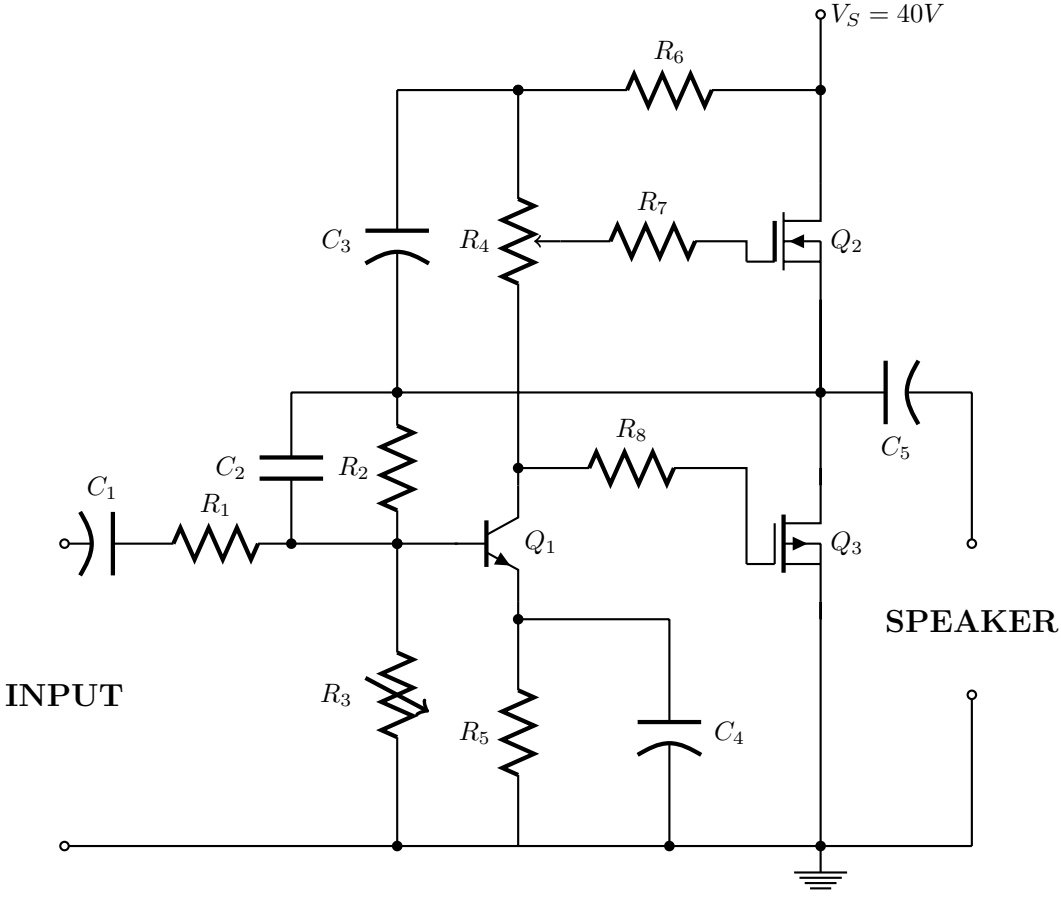
$V_S = 40V$
R_6
R_7
C_3
R_4
Q_2
C_5
R_8
C_2
R_2
C_1
R_1
Q_1
Q_3
SPEAKER
INPUT
R_3
R_5
C_4