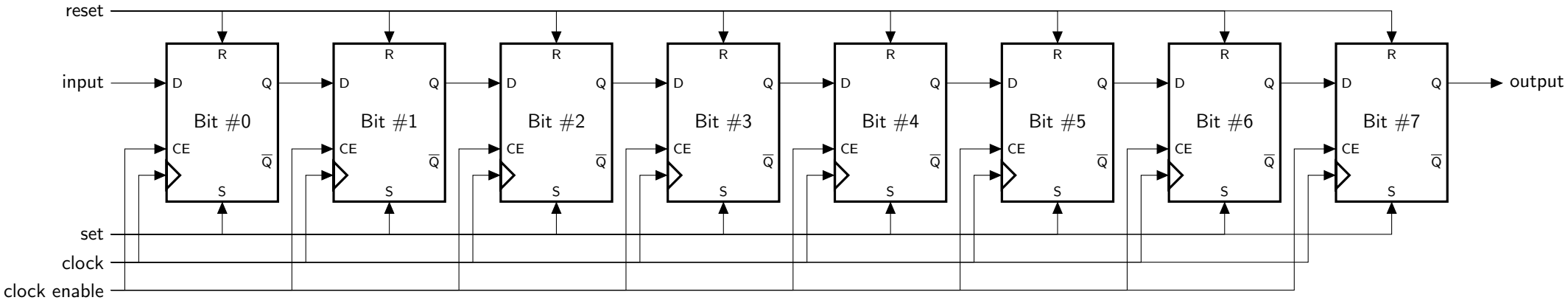
reset
input
set
clock
clock enable
output
R
D
Q
CE
S
Bit #0
Bit #1
Bit #2
Bit #3
Bit #4
Bit #5
Bit #6
Bit #7